Cover for tap hole - Brushed Chrome

IMO

12 715 970

Fits: IMO, LULU, MADISON, MEM, TARA, CL.1, LISSÉ, VAIA, META, CYO

Brushed Chrome	12 715 970-93
Chrome	12 715 970-00
brushed chrome	12 715 970-04
Brushed Platinum	12 715 970-06
Platinum	12 715 970-08
Durabrass (23kt Gold)	12 715 970-09
Dark Chrome	12 715 970-19
Light Gold	12 715 970-26
Brushed Light Gold	12 715 970-27
Brushed Durabrass (23kt Gold)	12 715 970-28
Matte Black	12 715 970-33
Brushed Bronze	12 715 970-42
Brushed Champagne (22kt Gold)	12 715 970-46
Champagne (22kt Gold)	12 715 970-47
Brushed Dark Platinum	12 715 970-99

We reserve the right to change designs, product range and technical specifications without prior notice.
More information can be found at: www.dornbracht.com +49 (0) 2371 8899 900 mail@dornbracht.com

Cover for tap hole - Brushed Chrome

IMO

12 715 970

Cover for tap hole - Brushed Chrome

IMO

12 715 970

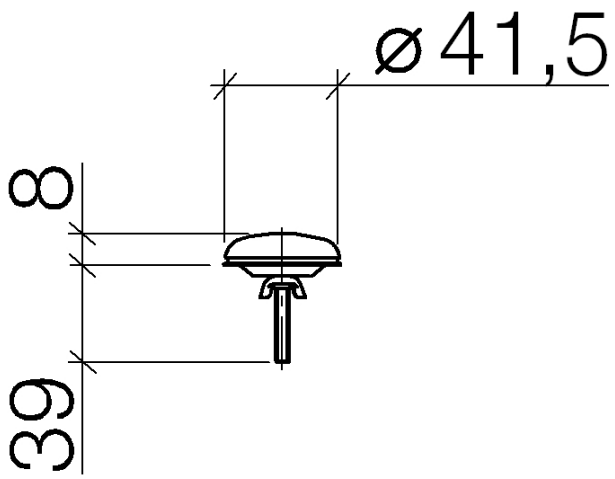

Cover for tap hole - Brushed Chrome

IMO

12 715 970
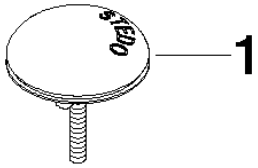
Parts for other
finishes can be found
here: Chrome